tcentric hybrid™

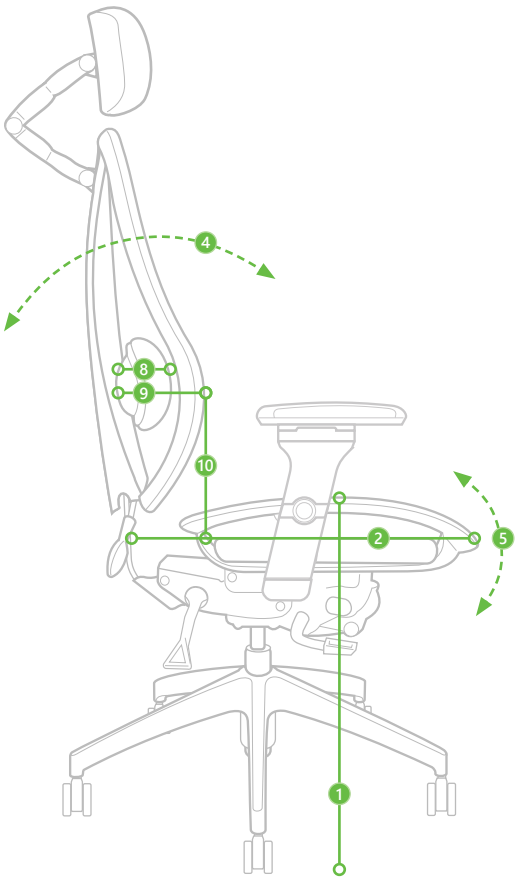

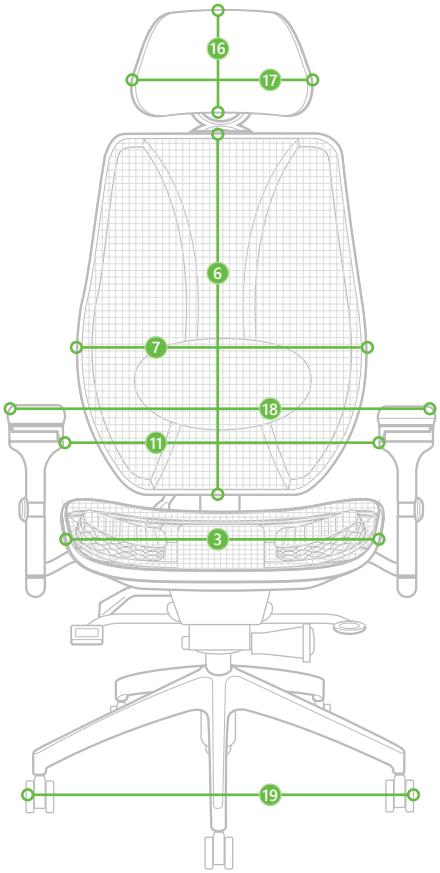

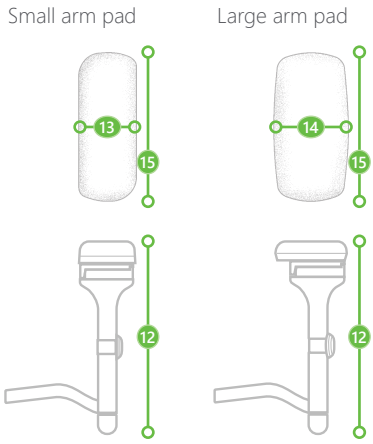

MEASUREMENTS (AS MEASURED ON A SYNCHRO GLIDE MECHANISM)

1	Seat height 70 mm gas lift	16.1"-19"
	Seat height 80 mm gas lift	17.1"-20.1"
	Seat height 100 mm gas lift	17.8"-21.7"
	Seat height 125 mm gas lift	17.5"-22.5"
	Seat height 125 mm LT gas lift (standard)	16.8"-21.8"
	Seat height 140 mm gas lift	19.3"-24.6"
2	Seat depth range – large seat (standard)*	17"-18.5"
3	Seat width – large seat (standard)*	21"
4	Back angle adjustment range to the horizontal	89°-105° (16° range)
5	Seat pan angle (6° range) 3.5° forward	2.5° backward
6	Backrest height	23"-28"
7	Backrest width	19"
8	Lumbar depth	4.75"
9	Air lumbar depth range	4.75"-6"
10	Lumbar height range	6.5"-11.5"

Measurements in inches.
Where the chair is adjustable, minimum and maximum measurements are listed.

* Optional upholstered seat sizes include:
Extra small (17.5"w x 15.5"d), small (18.5"w x 17"d), standard (20"w x 19"w), plus size (22"w x 19"d), extra long (20"w x 21"d) and extra deep (22"w x 21"d).

11	Distance between arms with height adjustment only	small pad: 20.25" large pad: 18"
	Distance between arms with height and lateral adjustments	small pad: 15.25-20.25" large pad: 13"-18"
	Distance between arms with height and swivel adjustments	small pad: 20.25" large pad: 18"-20.25"
	Distance between arms with height, swivel and lateral adjustments	small pad: 15.25-20.25" large pad: 13"-20.25"
12	Armrest height without lateral adjustments	5.75"-9.75"
	Armrest height with lateral adjustments	6.5"-10.5"
	Arm pad width	13 small pad: 3.75" 14 large pad: 5"
15	Arm pad length	10"
16	Headrest height	7.5"
17	Headrest width	12.25"
18	Max. chair width with armrests fully extended	28"
19	Footbase diameter	26"
	Weight	60.65 lbs
	Weight without headrest	58.25 lbs
	Weight without headrest and TCL360	46.35 lbs

ergoCentric®
ergocentric.com